REINTJES
POWERTRAIN SOLUTIONS

Gearboxes for

Work Boats

WAF/LAF 2346 – 7760 | 1,350 – 8,500 kW

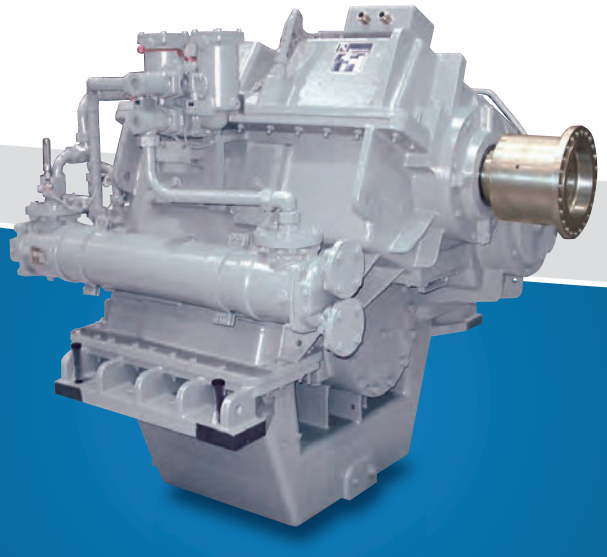

QUALITY
MADE IN
GERMANY

Applications for Work Boats

WAF/LAF 2346 – 7760

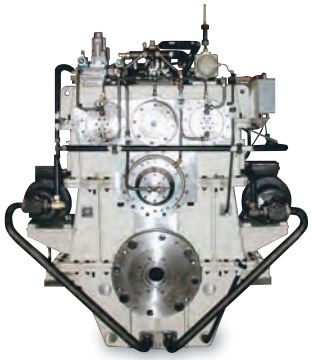

Reduction gearbox with built-in clutch, vertically offset PTO/PTH for special application

Reduction gearbox with built-in clutch, vertically offset

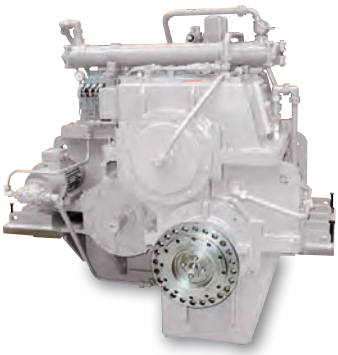

Reverse-reduction gearbox, horizontally offset

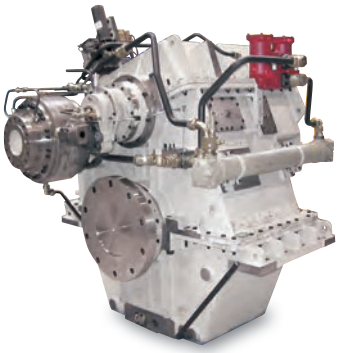

Reverse-reduction gearbox vertically offset shaft brake, GADS and UMS supervision

Advantages

Gearboxes of the WAF and LAF series have been specially designed for work boats such as tugs, container-vessels, inland waterway crafts, ferries and special-purpose ships with similarly high performance demands.
We have the backing of over 80 years of experience in marine gearbox production and use state-of-the-art computation tools and production technologies.

Owing to their design for specific areas of application, the hydraulically operated reversereduction gearboxes of the WAF series, as well as the reduction gearboxes of the LAF series offer various special advantages:

- High operating reliability
- Simple operation and maintenance
- Compact dimensions
- Low operating noise

Gearbox selection

The selection diagram opposite gives an overview of the performance ratings of the basic WAF and LAF types.

However, for the final selection of gearboxes only the ratings of the applicable gearbox selection table are binding.

D E S I G N E D F O R H E A V Y D U T Y A P P L I C A T I O N S

Engine power

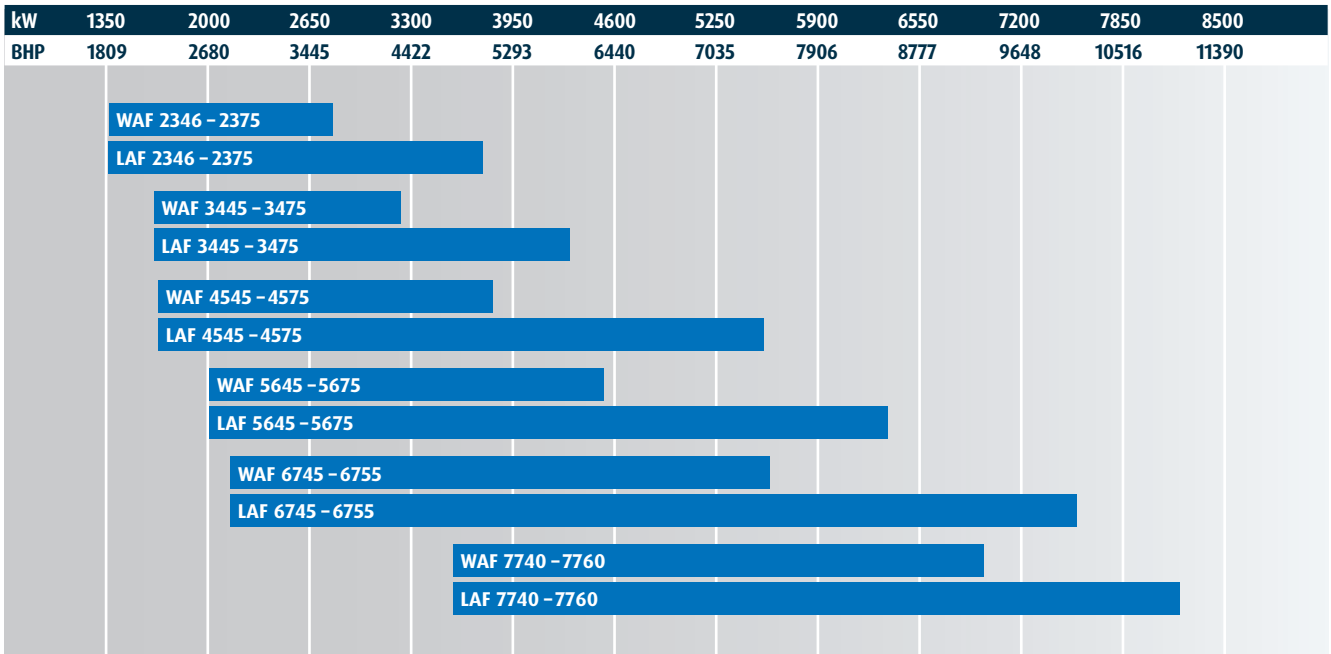

Marine Gearboxes
WAF/LAF 2346 – 7760

WAF/LAF 2346 – 7760

Reverse-reduction/ Reduction gearbox with hydraulically operated clutches.
Vertically offset

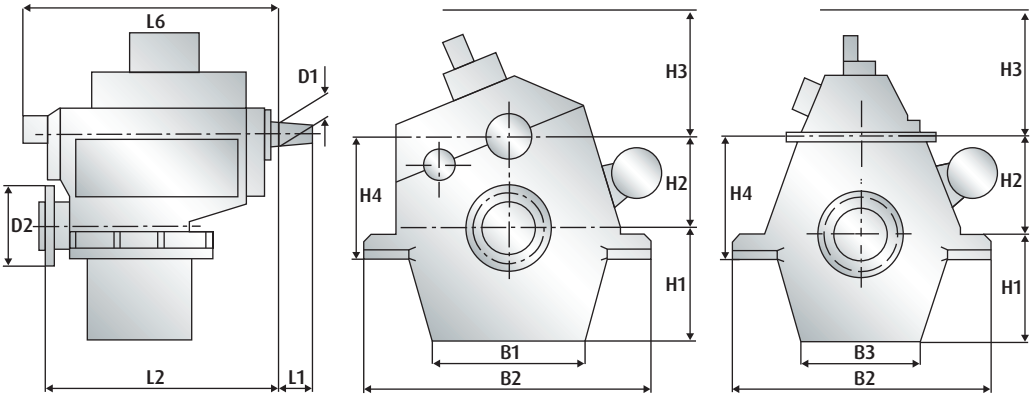

Gearbox	Main Dimensions (mm)												Weight kg[1])	
WAF/LAF	B1	B2	D1	D2	H1	H2	H3 WAF	H3 LAF	H4	L1	L2	L6	WAF	LAF
2346*	730	1550	162	550	630	560	600	600	720	200	1475	1800	6000	5200
2355	920	1780	162	600	730	660	600	600	820	200	1470	1800	7000	6300
2365*	1050	2120	162	600	770	760	600	600	920	200	1470	1800	8000	7000
2375	900	2120	162	650	875	865	700	700	1085	200	1480	1800	10000	9200
3445	790	1660	167	600	660	600	560	560	760	200	1540	1870	7100	6400
3455	930	1880	167	650	770	710	700	700	870	200	1550	1870	8500	7800
3465	930	2100	167	650	850	815	700	700	975	200	1550	1870	10400	9700
3475	1150	2380	167	670	970	925	700	700	1095	200	1570	1870	11500	10800
4545	930	1880	187	650	770	650	600	750	810	235	1630	1970	8900	8000
4555	960	1980	187	670	810	765	600	750	935	235	1655	1970	10500	9500
4566	1240	2400	187	710	935	885	730	750	1065	235	1695	2050	12600	11100
4575	1480	2750	187	710	1055	1010	730	750	1190	235	1695	2050	14100	13100
5645*	1100	1980	195	670	810	690	700	900	860	250	1725	2090	11600	9000
5655*	1275	2240	195	710	870	815	700	900	995	250	1765	2090	13200	11800
5666*	1395	2420	195	750	980	935	700	900	1135	250	1870	2090	16000	13800
5675*	1600	2700	195	800	1110	1055	700	900	1255	250	1710	2090	18000	17000
6745*	1275	2240	217	710	870	735	950	900	915	265	1870	2220	15000	12000
6755*	1280	2280	217	750	930	880	950	900	1080	265	1875	2220	17000	13800
6766*	1500	2450	217	800	1040	1000	1000	900	1260	265	1915	2220	18000	17000
7740*	1280	2280	217	750	930	800	900	900	1000	305	1985	2390	17000	15500
7750*	1300	2300	217	800	910	900	900	900	1100	305	2030	2390	19000	16500
7760*	1500	2450	217	900	1040	1050	1000	900	1310	305	2110	2390	20500	17500

1) Gearbox standard design (dry). Dimensions and weights not strictly binding. Subject to change.
*Gearbox housing of types LAF 2346, 2365, 4545 - 7770 see top right view, all other WAF and LAF housings see top left and top center view.

Direction of rotation WAF/LAF

Seen from propeller onto engine flywheel in direction of travel ahead

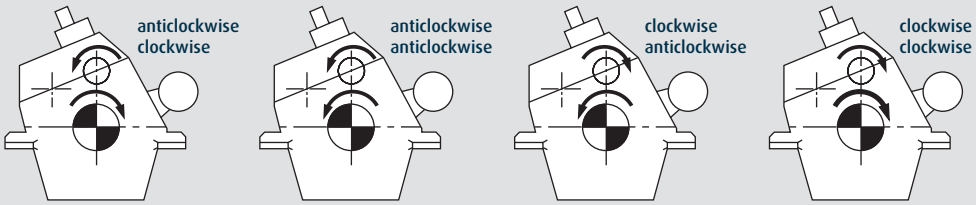

REINTJES
POWERTRAIN SOLUTIONS

WAF/LAF 2346 – 6755

Reverse-reduction/
Reduction gearbox
with hydraulically
operated clutches.
Horizontally offset

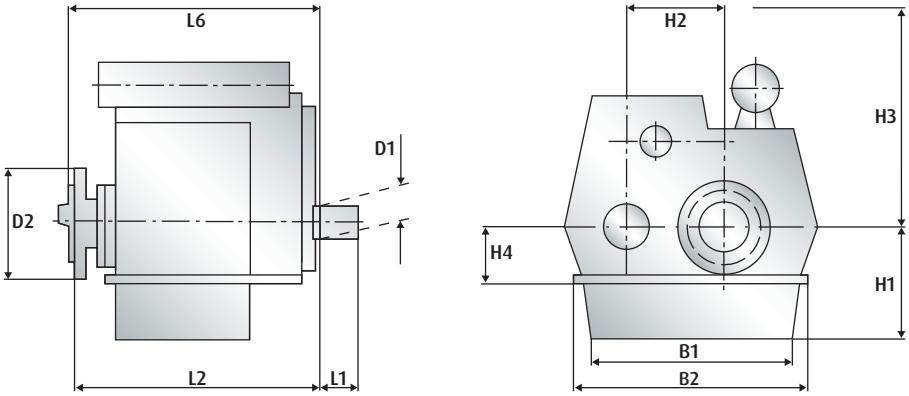

Gearbox	Main Dimensions (mm)											Weight kg[1])	
WAF/LAF	B1	B2	D1	D2	H1	H2	H3	H4	L1	L2	L6	WAF	LAF
2346	1160	1980	162	550	600	560	1250	160	198	1485	1800	7200	6500
2355	1000	2180	162	600	680	660	1250	160	198	1470	1800	7500	6800
2365	1481	2100	162	600	770	760	1290	350	198	1470	1800	9400	8600
3445	1240	2060	167	600	660	600	1150	160	198	1540	1880	8200	7500
3455	1550	2430	167	650	770	710	1200	160	198	1550	1880	9800	9100
4545	1450	1950	187	650	710	650	1350	160	237	1630	1970	10500	9600
4555	1600	2470	187	670	820	765	1300	170	237	1655	1970	11800	10800
5666	1545	2050	197	670	740	690	1350	400	251	1725	2080	13000	12500
6745	1550	2150	217	710	780	735	1350	445	263	1875	2210	15200	14200
6755	1810	2590	217	750	920	880	1380	445	263	1875	2210	17600	16600

1) Gearbox standard design (dry). Dimensions and weights not strictly binding. Subject to change.

WAF series

Reverse-reduction
gearbox for propulsion
with fixed pitch propeller

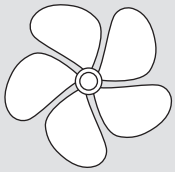

Counter or identical
rotation of input and
output as standard

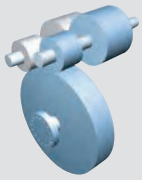

LAF series

Reduction gearbox with
built-in cluth for propulsi-
on with controllable
pitch propeller

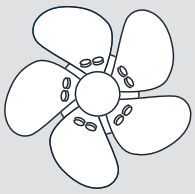

Counter rotation of
input and output as
standard, identical
rotation available as
option

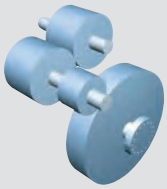

Standards
WAF/LAF 2346 – 7760

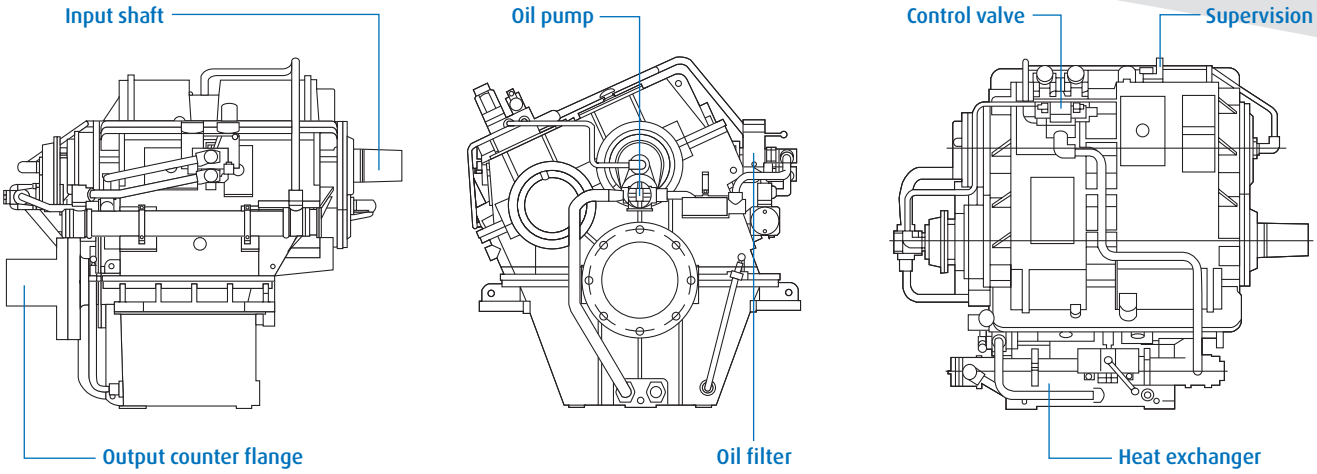

Basic equipment

- Housing made from grey cast iron or steel housing in torsion stiff design, rigid mounting
- Spur wheels helically toothed, case hardened and tooth flank ground
- Built-in hydraulically operated disc clutches with steel/sinter friction surface
- Smooth engagement by adapted pressure increase during shifting
- Full power transmission and same reduction in both output senses of rotation

Scope of supply

STANDARD

- Integrated oil sump. Common circuit for operating pressure and lube oil. Oil pump and oil filter accessible from the outside
- Fitted heat exchanger for cooling water inlet temperature of max. 38° C, seawater resistant
- Connection facility for remote supervision of pressure and temperature
- Built-on control valve, electrically or pneumatical-lyoperated
- Emergency control: in case of failure of operating pressure mechanical force locking of the disc cluth is possible
- Input: free shaft end with taper 1: 30
- Output: forged-on-flange
- Supervision

1. Pressure switch – operating pressure too low
2. Thermometer – oil temperature behind heat exchanger
3. Filter contamination – electrical signal for operating oil pressure
4. Pressure gauge for operating oil pressure
5. Pressure switch: clutch ahead for LAF

- Paint coating with synthetic resin varnish in all RAL colours

EXTRAS

- Output counter flange
- Flexible coupling
- Supervision instruments as per classification rules
- Special PTO executions
- Special PTI executions
- Spare part kit as per classification rules
- Heat exchanger for cooling water inlet temperature higher than 38° C
- Trolling valve (ADS)
- Resilient mounting
- Special reduction ratios
- Electrical stand-by or trailing pumps
- Built-in shaft brake, hydraulically operated

Subject to change.

REINTJES
POWERTRAIN SOLUTIONS

OPTIONS AND FEATURES

Options

POWER TAKE OFF (PTO)-/ POWER TAKE IN (PTI)

If required, the gearboxes can be fitted with additional power take off (PTO) and power take in (PTI) (application: hydraulic pumps and generators).

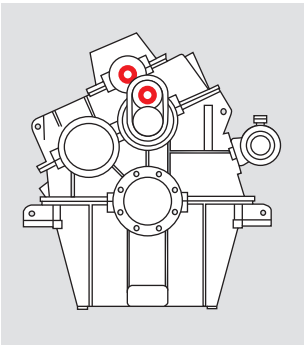

POWER TAKE OFF (PTO)-/ POWER TAKE HOME (PTH)-COMBINATION

Primarily driven PTO in combination with secondary PTH. Different propeller speed for PTH-operation or for operation with main engine possible.

UNATTENDED MACHINERY SPACE

All gearboxes can be supplied with additional supervision instruments, according to classification society rules, enabling the operator to take all necessary information from the bridge.

ADS (ACTIVE SPEED CONTROL SYSTEM) CLOSE LOOP OR CONTROLLED

The ADS is used for travelling at low propeller speeds. Speed is varied via the oil pressure in the clutch.

The ADS can be engaged in both AHEAD and ASTERN propulsion modes. Reversals with operative ADS are also possible at low ship speeds.

OD-BOX

For all customary CPP systems, the output shaft can be provided with a centre bore and a connection for the oil distributor box.

SHAFT BRAKE

The gearboxes can be fitted with a hydraulically operatedmultiple disk brake built in for assisting with reversing manoeuvres or serving as fixing/stopping brake on twin-screw vessels.

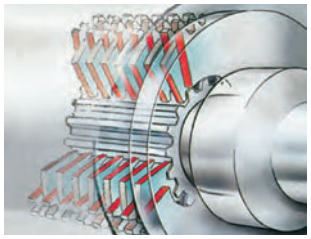

Duty cycle classification

C

CONTINUOUS DUTY

- Continuous operation with little or no variations in engine speed and power
- Average engine operating hours: unlimited
- Allowable hull forms: semi-displacement, displacement
- Allowable applications: commercial vessels

Other duty cycles on request.

Approved quality

Several renowned classification societies have granted REINTJES permission to conduct inspection and approval procedures themselves. In the same way many gearbox types come with a drawing approval or full classification for the main classification societies (IACS members). Since 1990 REINTJES has been certified to DIN ISO 9001/ EN 29001.

REINTJES
POWERTRAIN SOLUTIONS

REINTJES GmbH
Eugen-Reintjes-Straße 7
31785 Hameln
Germany
Phone +49 51 51 104- 0
Fax +49 51 51 104-300
E-Mail marine@reintjes-gears.de
www.reintjes-gears.de

Kessler Werbung GmbH · 09.2015 · **Subject to change**